Electrical and Control

ET2210

Voltage	100-240VAC
Power	10W
Power Supply	Built-in
Control	ON/OFF
Insulation Class	Class I
Cable	0.5M H05RN-F 3x1mm²
Environmental	-40 °C ~ 50 °C

LED and Optics

LED Brand	Philips / CREE
LED Quantity	LED X 4
Beam Angle	Asymmetric
Delivered Lumen	490lm(Asymmetric)
Colour Rendering	CRI 80
SDCM	≤5
CCT	2700K / 3000K / 4000K/ 5000K
LED Optic	PMMA Lens

Physical

Housing	Die-cast aluminum
Lens Material	Tempered glass
External Screw	Stainless steel material
Surface Treatment	Anticorrosive coating
Net Weight	0.5KG
Warranty	3 years
Rating	IP65
Impact Protection	IK08
Certifications	CE

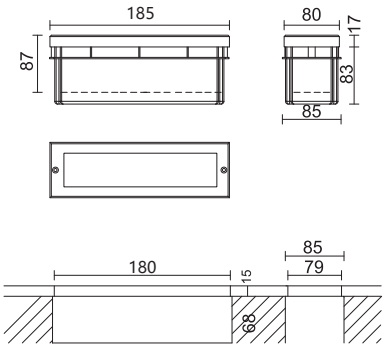

RAL9011	RAL9006	RAL9016
Mineral bronze	RAL7012	RAL7016

Photometric curves:

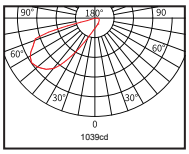

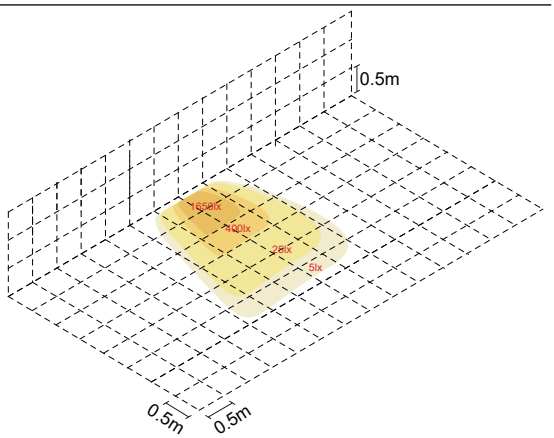

Installation Instructions

Matters needing attention

- Before the lamp is connected, please carefully check the input voltage, so as not to cause damage to the lamp.
- The installation and removal of lamps require professional technical personnel to operate.
- When you open the package, please check if there are signs of serious damage to the lamps.
- When connected, please cut off all lighting fixtures to connect the power supply, so as not to get an electric shock.
- This product can only be installed in dry or sunny weather.
- Can not remove the original structure, to avoid leakage of light.
- Glass with waterproof and dust, such as the discovery of broken glass, please replace the glass in a timely manner.
- Waterproof grade IP65 lamps, lamps shall not be installed in the low-lying or long-term water, electrical boxes need to be higher than the surface.
- Lighting outlet and on-site power supply cable connection needs to do IP68 protection level, so as not to affect the normal operation of the lamp.
- Please choose according to product appearance specifications corresponding to the power supply, power cable, not led lamp and metal halide lamp, sodium lamp and motor share a power supply circuit.
- Lamps are not recommended to be installed on the beach and corrosive chemical areas, so as not to cause corrosion of lamps and lanterns led to light damage.

Power on - not connected to power

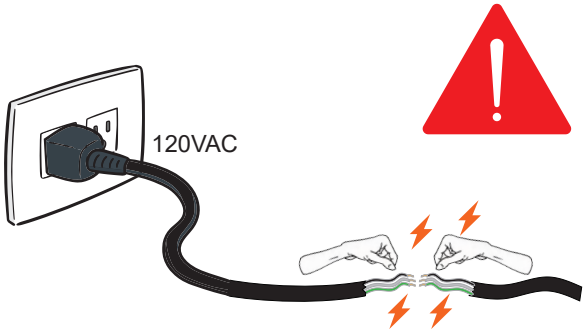

Rain - no power connection

Do not come into contact with corrosive substances

Attention to wiring waterproof requirements IP68

Installation Instructions

ET2210

1

Drill holes according to the size of the embedded parts, and reserve cable lines for the embedded parts

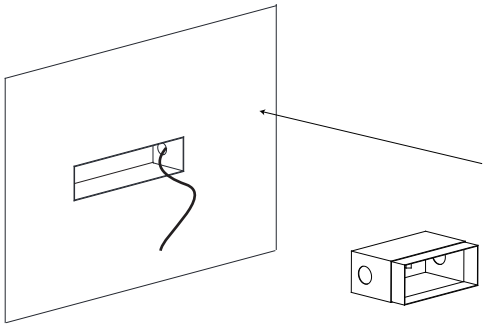

2

Install the embedded parts into the holes and thread the cables out of the embedded parts

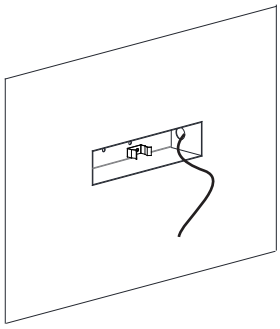

3

Pay attention to the installation of the lighting fixtures in the up and down directions. The lighting fixtures are used for downward illumination

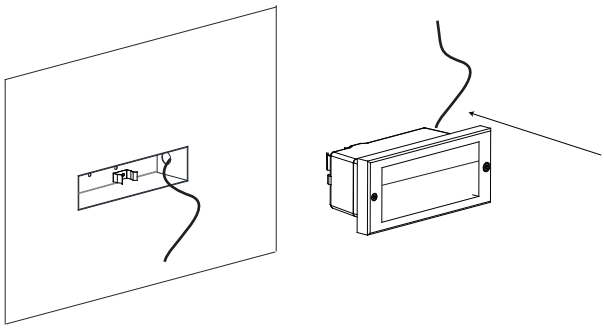

4

Connect the lighting cable to the on-site cable, pay attention to the waterproof issue at the connection point

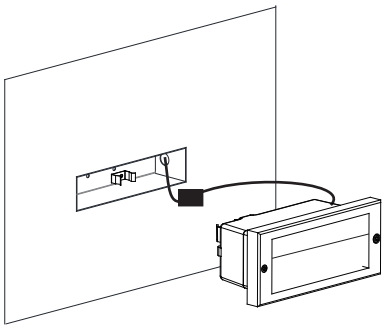

5
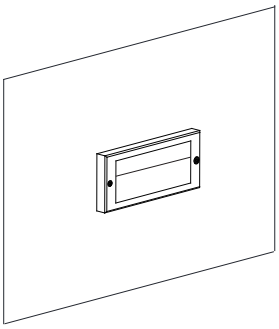
Finally, fix the lighting fixtures onto the embedded parts